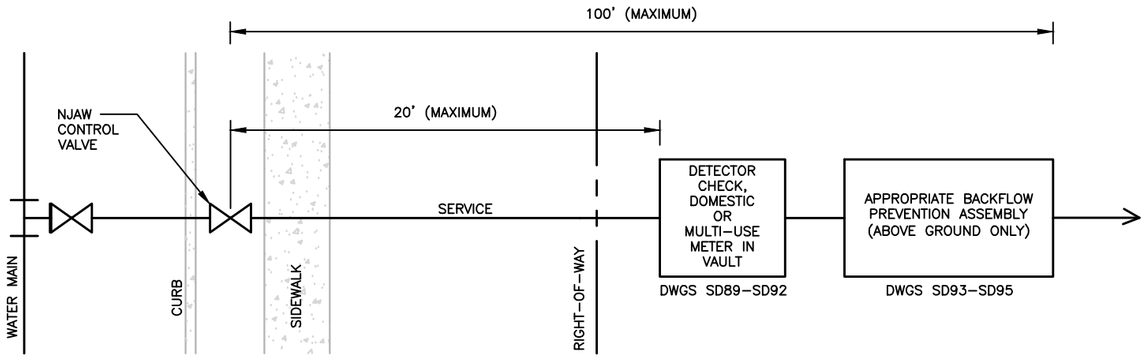

VAULT & ENCLOSURE LOCATION– MAIN IN STREET

NOTES:

1. ALL METERS (3" & LARGER) SHALL BE INSTALLED IN A CONCRETE VAULT.
2. ALL BACKFLOW PREVENTION DEVICES SHALL BE INSTALLED IN AN ABOVEGROUND ENCLOSURE, IMMEDIATELY ADJACENT (I.E. AS CLOSE AS PRACTICABLE) TO THE DISCHARGE SIDE OF THE METER.
3. NOT WITHSTANDING THE ABOVE, IF A METER VAULT AND HEATED BP ENCLOSURE ARE INSTALLED, BOTH STRUCTURES SHALL BE INSTALLED WITHIN 100 FEET OF THE NJAW CONTROL VALVE (MAXIMUM).
4. NJAW MAY WAIVE HEATED BP ENCLOSURE AND ALLOW BACKFLOW PREVENTER INSTALLATION IN BUILDING IF THE 100 FOOT REQUIREMENT IS MAINTAINED.
5. THE INSTALLATION MUST ALSO MEET ALL APPLICABLE CODE & REGULATORY REQUIREMENTS INCLUDING THE NATIONAL STANDARD PLUMBING CODE AND NEW JERSEY STATUTES AND REGULATIONS.

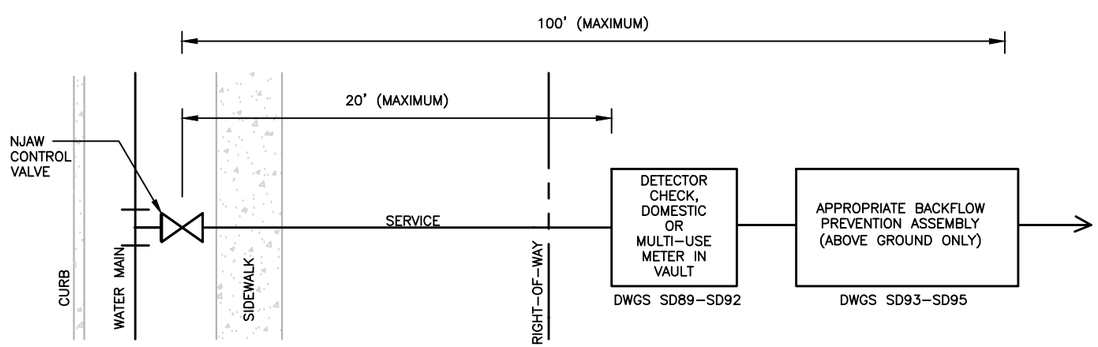

VAULT & ENCLOSURE LOCATION– MAIN BEHIND CURB

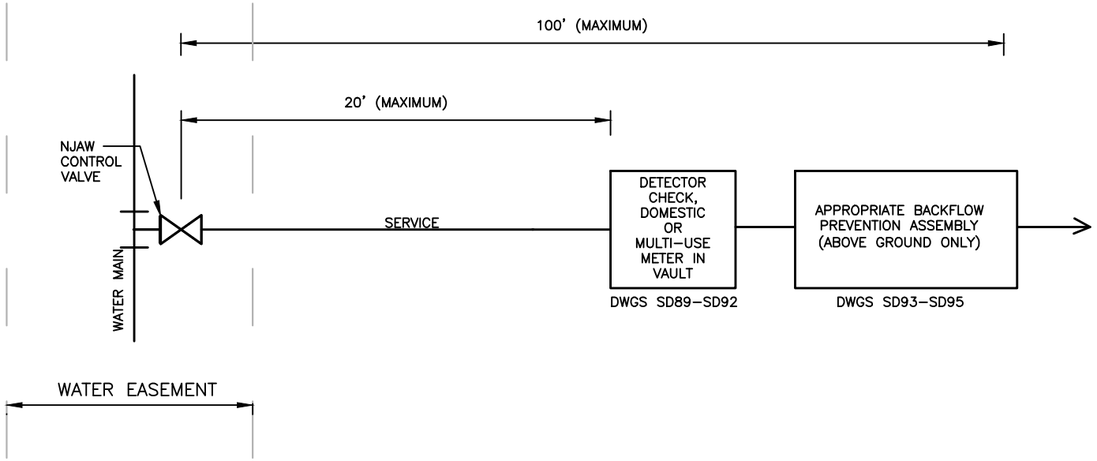

VAULT & ENCLOSURE LOCATION– MAIN IN EASEMENT

NEW JERSEY AMERICAN WATER

REVISIONS		REVISIONS	
△		△	
△		△	
△		△	
△		△	
△		△	

NJ LICENSED PROFESSIONAL ENGINEER

AMERICAN WATER ENGINEERING
3500 CHURCH RD.
MT. LAUREL, NJ 08054

AMERICAN WATER

DRAWN BY D. JOBE
PROJECT ENG'R E. SCHWARTZ

DATE 08-24-18

PROJECT

STANDARD DETAIL
DOMESTIC, FIRE & MULTI-USE SERVICE LOCATION SCHEMATIC

NEW JERSEY AMERICAN WATER

USE APPROVED DRAWINGS ONLY FOR CONSTRUCTION PURPOSES

USE DIMENSIONS ONLY
SCALE NOT TO SCALE

0201-0601-SD88

02010601SD88

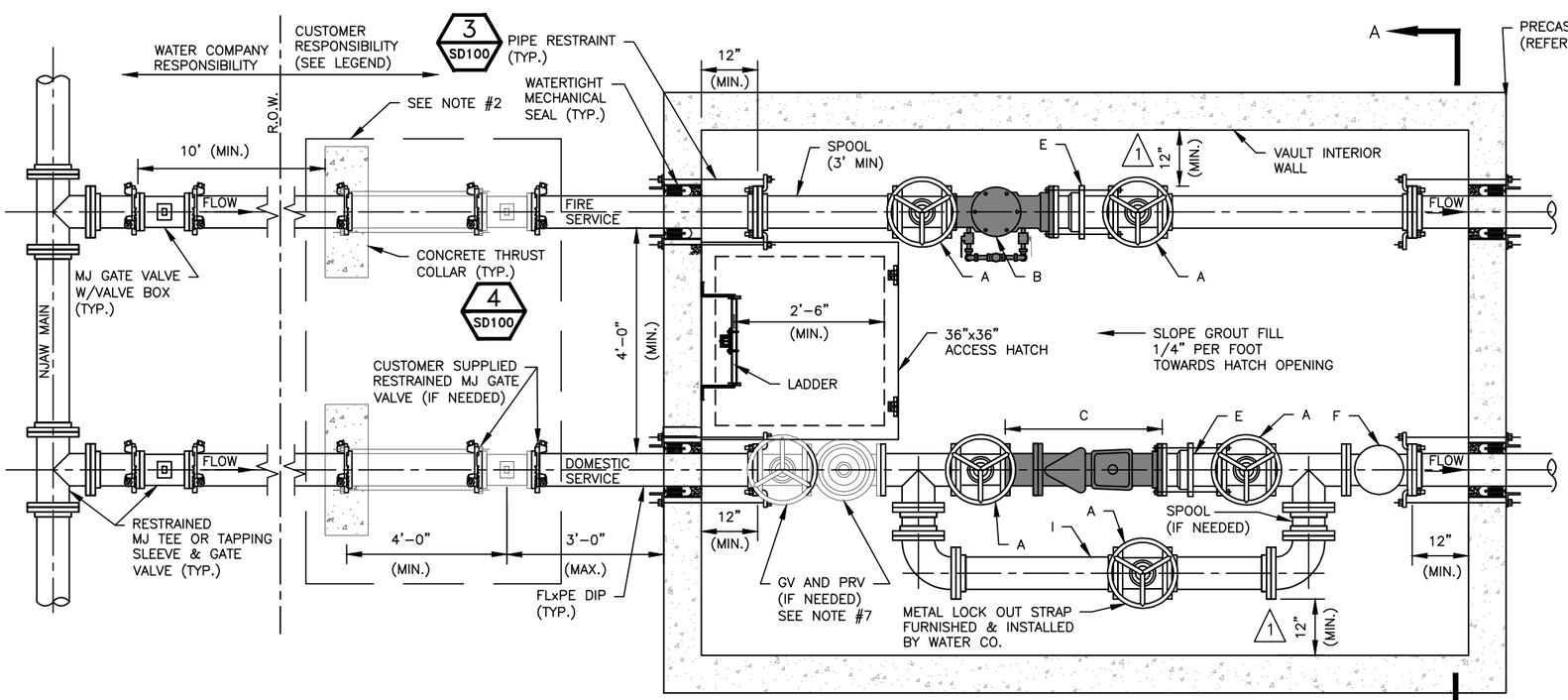

PLAN
N.T.S.

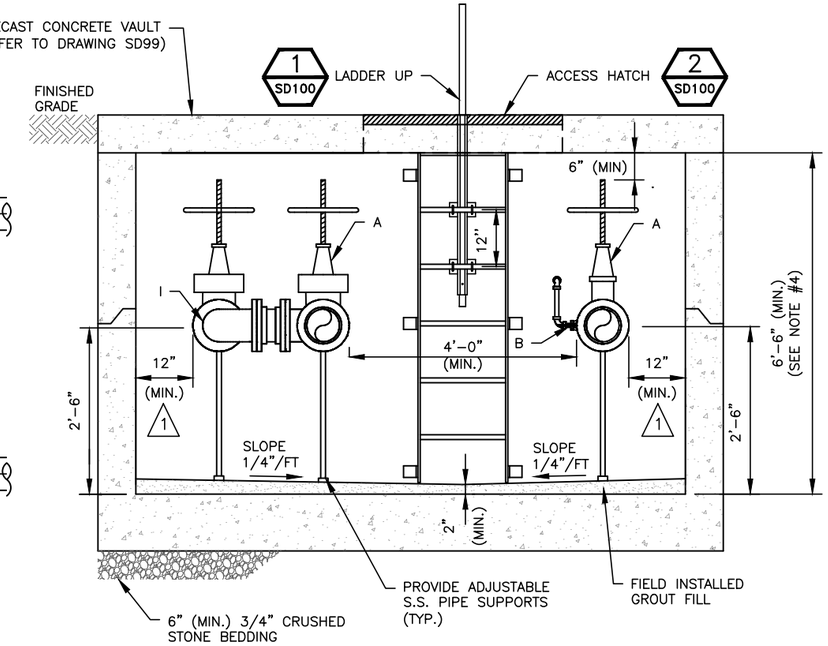

SECTION A–A
N.T.S.

LEGEND:

COMPONENTS SHADED IN GRAY TO BE FURNISHED BY WATER CO.

A– OS&Y GATE VALVE WITH FLANGED ENDS (FURNISHED & INSTALLED BY CUSTOMER)

B– DETECTOR CHECK VALVE W/ BYPASS METER (FURNISHED BY WATER CO., INSTALLED BY CUSTOMER)

C– DOMESTIC COMPOUND METER ASSEMBLY– METERS WITH FLANGED ENDS (FURNISHED BY WATER CO., INSTALLED BY CUSTOMER)

E– DISMANTLING JOINT TO HAVE FLANGED ENDS WITH JOINT RESTRAINT (FURNISHED & INSTALLED BY CUSTOMER)

F– SWING CHECK WITH FLANGED ENDS (FURNISHED & INSTALLED BY CUSTOMER)

I– BYPASS SIZE SHALL BE NO GREATER THAN ONE STANDARD PIPE SIZE SMALLER THAN DOMESTIC SERVICE SIZE AND SHALL HAVE METAL STRAP FOR LOCKING OUT BYPASS VALVE (STRAP FURNISHED & INSTALLED BY WATER CO.)

BACKFLOW DEVICE:

A BACKFLOW DEVICE IS REQUIRED BY THE NJDEP. THE BACKFLOW DEVICE IS FURNISHED & INSTALLED BY CUSTOMER. THE BACKFLOW DEVICE CANNOT BE INSTALLED INSIDE THE VAULT OR ANY CONFINED SPACE. IT MAY BE INSTALLED IN AN INSULATED HEATED ABOVEGROUND ENCLOSURE OR INSIDE THE BUILDING. THE BACKFLOW DEVICE MUST BE PLACED BEFORE THE FIRST CONNECTION. IF IN BUILDING, LOCATION MUST BE APPROVED BY NJAW PRIOR TO ANY INSTALLATION. REFER TO DRAWING 0201–0601–SD93.

NOTES:

1. VAULTS ARE REQUIRED BY NJAW FOR LARGE METERS (3" & LARGER) AND ARE TO BE FURNISHED AND INSTALLED BY CUSTOMER. ACCESS TO VAULT VIA ALUMINUM 36"x36" BILCO PCM–4 TYPE, FLUSH, WATERTIGHT SIDEWALK DOOR W/ LADDER UP SAFETY POST OR EQUIVALENT. PLASTIC ENCASED STEEL OR ALUMINUM LADDER RUNGS CENTERED AT ONE FOOT (1') MUST BE PROVIDED. AREA AROUND VAULT MUST BE COMPLETELY WATERPROOFED. USE SOLID FLANGE & RODDING ON VALVES. ALL VAULT AND PIPING CONSTRUCTION IS SUBJECT TO WATER COMPANY APPROVAL PRIOR TO SERVICE.
2. IF VAULT IS >20 FEET FROM NJAW SHUTOFF VALVE, CUSTOMER IS REQUIRED TO FURNISH & INSTALL AN ADDITIONAL RESTRAINED MECHANICAL JOINT GATE VALVE & VALVE BOX WITHIN 3 FEET OF THE VAULT. IF VAULT IS <20 FEET FROM NJAW SHUTOFF VALVE, CUSTOMER SHALL INSTALL A SOLID, GASKETED, MECHANICAL JOINT SLEEVE RESTRAINED WITH WEDGE ACTION RESTRAINING GLANDS WITHIN 3 FEET OF VAULT.
3. EXTERIOR VALVES & FITTINGS SHALL BE RESTRAINED WITH WEDGE ACTION RESTRAINING GLANDS, THUST COLLARS AND/OR 304 STAINLESS STEEL RODS/NUTS AND CLAMPS.
4. BASED ON THE LARGEST SIZE GATE VALVE REQUIRED, THE MINIMUM VAULT HEIGHT (INTERIOR DIMENSION) SHALL BE AS FOLLOWS:

GV SIZE	VAULT HEIGHT
3" TO 8"	6'–6"
10"	7'–0"
12"	7'–6"

5. VAULT PIPING TO BE DUCTILE IRON MEETING ANSI/AWWA C115/A21.15, OR TYPE K DRAWN (HARD) TEMPER COPPER MEETING ASTM–B88.THE USE OF FLANGED COUPLING ADAPTERS IS STRICTLY PROHIBITED.
6. NO DETECTOR CHECK VALVES WILL BE MADE AVAILABLE TO THE CUSTOMER BY NJAW PRIOR TO THE INSPECTION BY NJAW.
7. THE CUSTOMER MUST INSTALL A WATER PRESSURE REDUCING VALVE WHERE REQUIRED BY STATE OF NEW JERSEY PLUMBING CODE. INSTALLATION RECOMMENDED WHERE AVERAGE PRESSURE IS GREATER THAN 80 PSI. WHERE A PRV IS REQUIRED IT SHALL BE PRECEEDED BY AN ADDITIONAL OS&Y GATE VALVE.

NEW JERSEY AMERICAN WATER

REVISIONS		REVISIONS	
1	REVISED DIMENSIONS R. BEATTY 11–29–22		

NJ LICENSED PROFESSIONAL ENGINEER NO.

AMERICAN WATER ENGINEERING
3906 CHURCH RD.
MT. LAUREL, NJ 08054

AMERICAN WATER

DRAWN BY R. BEATTY
PROJECT ENG'R E. SCHWARTZ

DATE 08–24–18

PROJECT

STANDARD DETAIL
DOMESTIC & FIRE SERVICE METER VAULT

NEW JERSEY AMERICAN WATER

USE APPROVED DRAWINGS ONLY FOR CONSTRUCTION PURPOSES

USE DIMENSIONS ONLY
SCALE NOT TO SCALE

0201–0601–SD89

02010601SD89

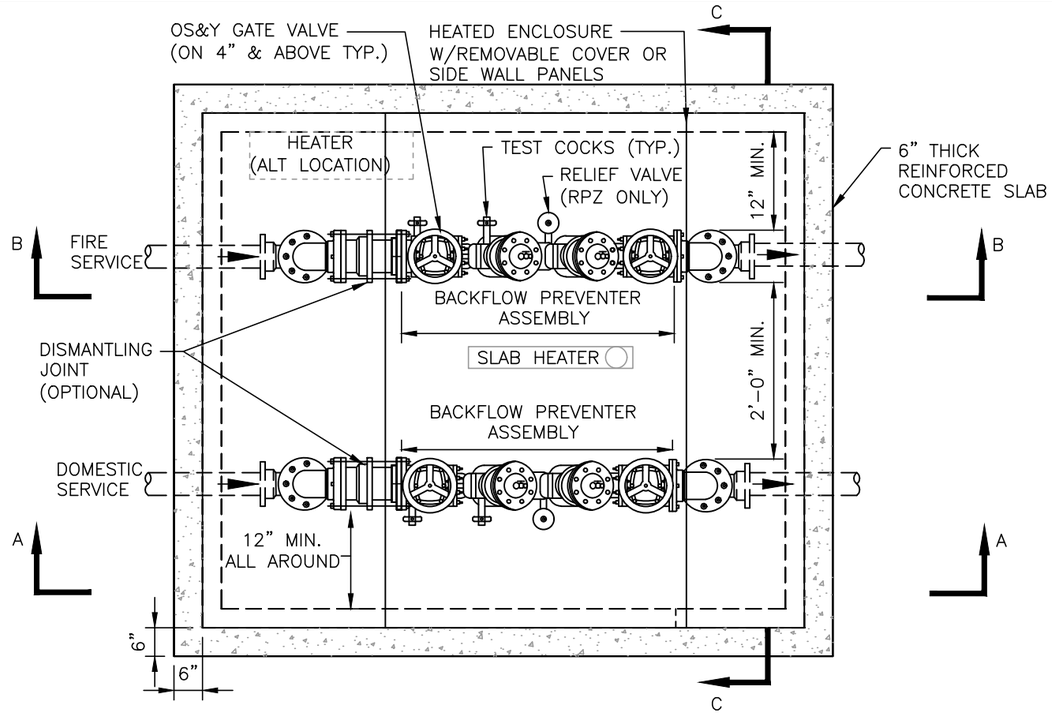

PLAN

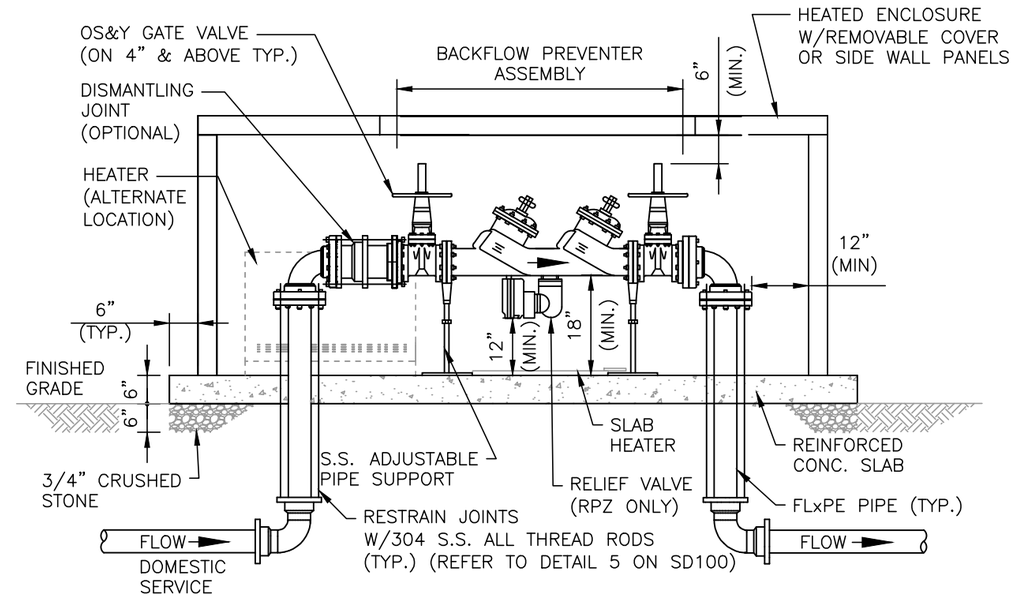

SECTION A–A

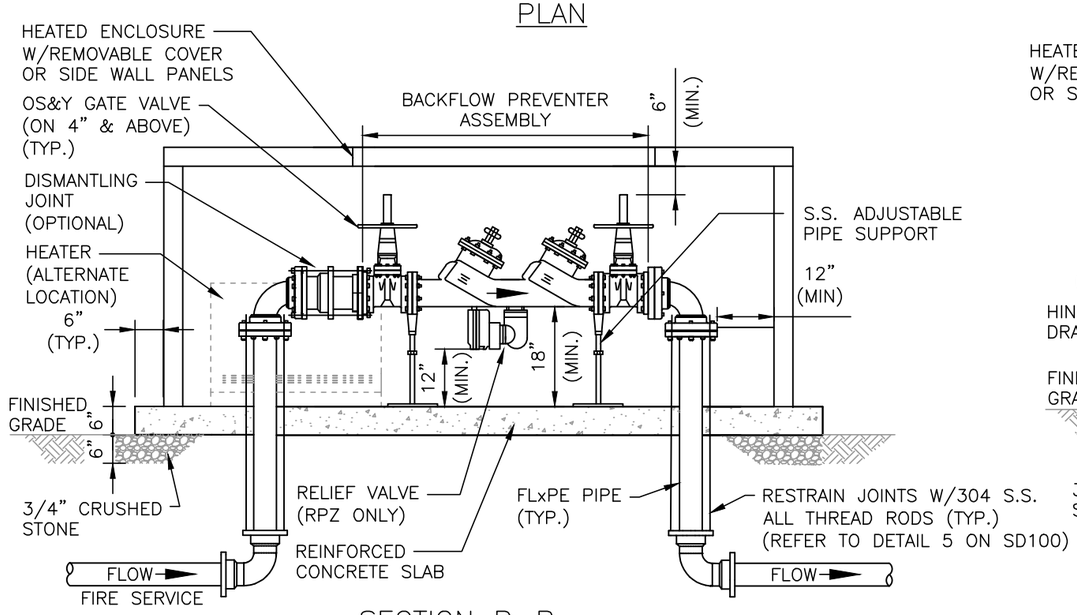

SECTION B–B

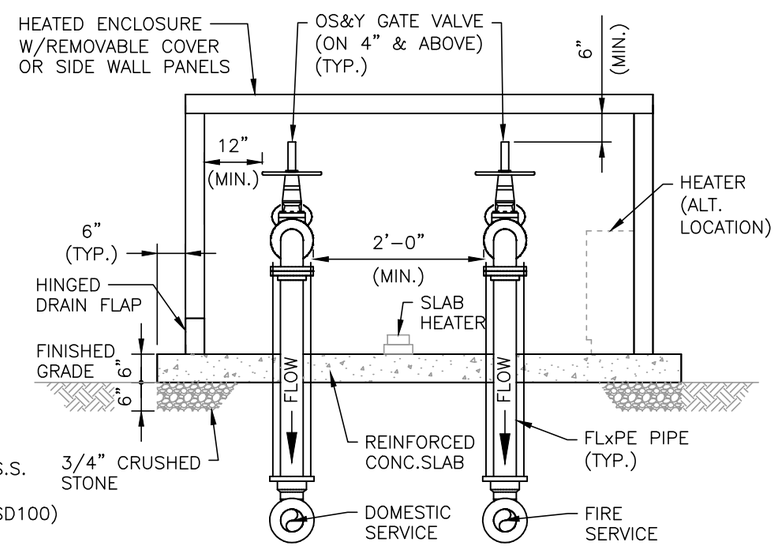

SECTION C–C

NOTES:

1. BACKFLOW PREVENTER ASSEMBLY SHALL NOT BE SUBJECT TO FLOODING.
2. BACKFLOW PREVENTER MUST BE INSTALLED ABOVE NATURAL GROUND, ABOVE THE 100 YEAR FLOOD LEVEL, UNLESS OTHERWISE APPROVED BY NJAW.
3. ENCLOSURE MUST MEET OSHA 29 CRF 1910.145 AND ASSE 1060 CLASS 1.
4. INSULATED HEATED ENCLOSURE CHARACTERISTICS.
   A. ENCLOSURE–5052–H32 MARINE GRADE ALUMINUM (0.050/18 GAUGE), MILL FINISH, OR 1/8" POLYESTER RESIN REINFORCED WITH FIBERGLASS STRAND
   B. INSULATION– 1–1/2" (R9) POLYISOCYANURATE FOAM
   C. HEATING SYSTEM– SLAB OR WALL MOUNT THERMOSTATICALLY CONTROLLED ELECTRIC HEATER MEETING SECTION 49 OF UL–2021 FOR DAMP OR WET LOCATIONS, WITH GFI RECEPTACLE, U.L. 943 NEMA 3R MOUNTED 8" (MIN.) ABOVE SLAB.
   D. HEATER(S) SHALL BE PROVIDED AS NECESSARY TO MAINTAIN TEMPERATURE ABOVE 40° F AT ALL TIMES.
5. ENCLOSURE MUST BE A SUFFICIENT SIZE TO HOUSE ALL REQUIRED PIPING. ENCLOSURE SHALL BE LOCKABLE. ACCESS PANELS SHALL BE ABOVE THE CENTERLINE OF THE ASSEMBLY, OR IN SIDE WALLS. ENCLOSURE TO HAVE HINGED ONE–WAY DRAIN FLAP. REFER TO DRAWING SD101.

NEW JERSEY AMERICAN WATER

REVISIONS		REVISIONS	
△		△	
△		△	
△		△	
△		△	
△		△	

LICENSED PROFESSIONAL ENGINEER
NO.

AMERICAN WATER ENGINEERING
3906 CHURCH RD.
MT. LAUREL, NJ 08054

AMERICAN WATER

DRAWN BY R. BEATTY
PROJECT ENG'R E. SCHWARTZ

DATE 08–24–18

PROJECT

STANDARD DETAIL
DOMESTIC & FIRE BACKFLOW PREVENTERS
IN HEATED ENCLOSURE

NEW JERSEY AMERICAN WATER	STANDARDS	USE DIMENSIONS ONLY SCALE AS SHOWN
USE APPROVED DRAWINGS ONLY FOR CONSTRUCTION PURPOSES		0201–0601–SD93

02010601SD93

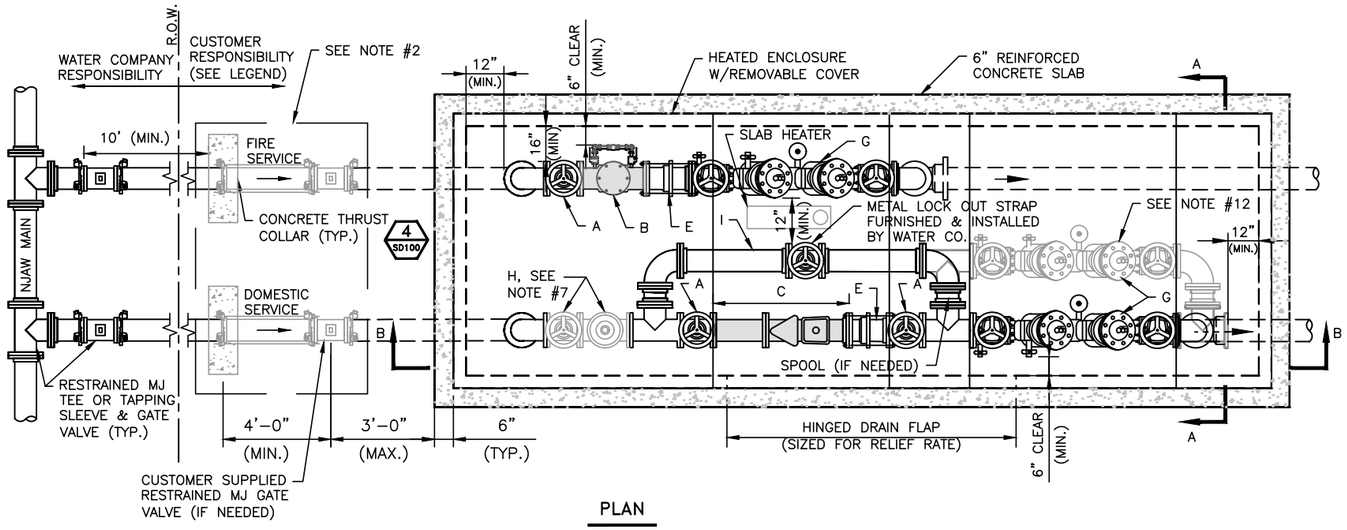

PLAN

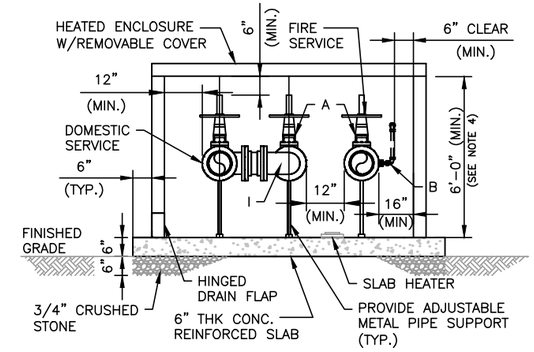

SECTION A–A

N.T.S.

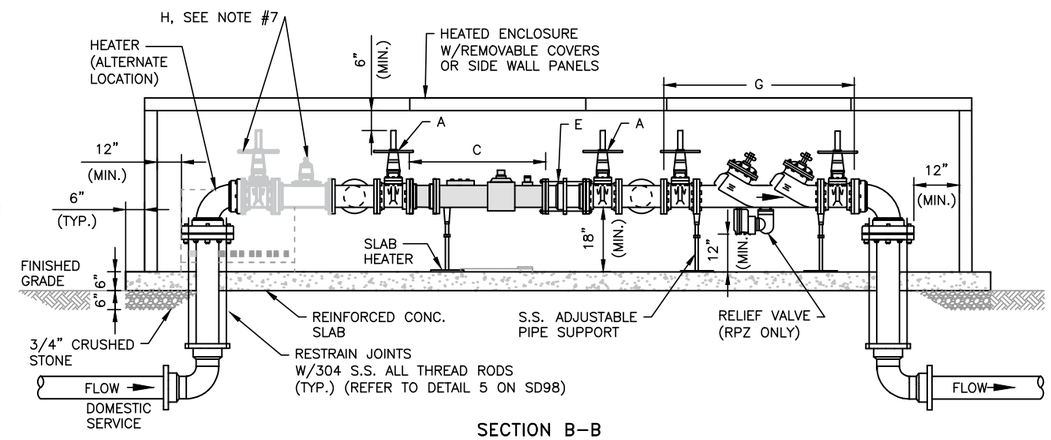

SECTION B–B

N.T.S.

NOTES:

1. IN LIEU OF PROVIDING A VAULT FOR LARGE METER(S) (3" & LARGER) AND AN ABOVEGOUND, HEATED ENCLOSURE FOR A BACKFLOW PREVENTER ASSEMBLY, NJAW MAY ALLOW BOTH THE METER ASSEMBLY AND THE BACKFLOW PREVENTER ASSEMBLY TO BE INSTALLED IN A SINGLE ABOVEGROUND, HEATED ENCLOSURE. IF APPROVED BY NJAW, THE ENCLOSURE AND ALL APPURTENANCES ARE TO BE FURNISHED AND INSTALLED BY CUSTOMER, UNLESS SPECIFICALLY INDICATED OTHERWISE IN THE LEGEND. ALL ENCLOSURE AND PIPING CONSTRUCTION IS SUBJECT TO WATER COMPANY APPROVAL PRIOR TO SERVICE.
2. IF ENCLOSURE IS >20 FEET FROM NJAW SHUTOFF VALVE, CUSTOMER IS REQUIRED TO FURNISH & INSTALL AN ADDITIONAL RESTRAINED MECHANICAL JOINT GATE VALVE & VALVE BOX WITHIN 3 FEET OF THE ENCLOSURE. IF VAULT IS <20 FEET FROM NJAW SHUTOFF VALVE, CUSTOMER SHALL INSTALL A SOLID, GASKETED, MECHANICAL JOINT SLEEVE RESTRAINED WITH WEDGE ACTION RESTRAINING GLANDS WITHIN 3 FEET OF VAULT.
3. EXTERIOR VALVES & FITTINGS SHALL BE RESTRAINED WITH WEDGE ACTION RESTRAINING GLANDS, THRUST COLLARS AND/OR 304 STAINLESS STEEL RODS/NUTS AND CLAMPS.
4. BASED ON THE LARGEST SIZE GATE VALVE REQUIRED, THE MINIMUM ENCLOSURE HEIGHT (INTERIOR DIMENSION) SHALL BE AS INDICATED BELOW. LENGTH AND WIDTH SHALL BE AS INDICATED ON STANDARD DETAIL SD101:

GV SIZE	ENCLOSURE HEIGHT
2" TO 8"	6'–0"
10"	6'–6"
12"	7'–0"

5. ENCLOSURE PIPING TO BE DUCTILE IRON MEETING ANSI/AWWA C115/A21.15, OR TYPE K DRAWN (HARD) TEMPER COPPER MEETING ASTM–B88. THE USE OF FLANGED COUPLING ADAPTERS IS STRICTLY PROHIBITED.
6. NO DETECTOR CHECK VALVES WILL BE MADE AVAILABLE TO THE CUSTOMER BY NJAW PRIOR TO THE INSPECTION BY NJAW.
7. THE CUSTOMER MUST INSTALL A WATER PRESSURE REDUCING VALVE WHERE REQUIRED BY STATE OF NEW JERSEY PLUMBING CODE. INSTALLATION RECOMMENDED WHERE AVERAGE PRESSURE IS GREATER THAN 80 PSI. WHERE A PRV IS REQUIRED IT SHALL BE PRECEEDED BY AN ADDITIONAL OS&Y GATE VALVE.
8. BACKFLOW PREVENTER ASSEMBLY SHALL NOT BE SUBJECT TO FLOODING.
9. BACKFLOW PREVENTER MUST BE INSTALLED ABOVE NATURAL GROUND, ABOVE THE 100 YEAR FLOOD LEVEL, UNLESS OTHERWISE APPROVED BY NJAW.
10. ENCLOSURE MUST MEET OSHA 29 CRF 1910.145 AND ASSE 1060 CLASS 1.
11. INSULATED HEATED ENCLOSURE CHARACTERISTICS:
    A. ENCLOSURE–5052–H32 MARINE GRADE ALUMINUM (0.050/18 GAUGE), MILL FINISH, OR 1/8" POLYESTER RESIN REINFORCED WITH FIBERGLASS STRAND
    B. INSULATION– 1–1/2" (R9) POLYISOCYANURATE FOAM
    C. HEATING SYSTEM– SLAB OR WALL MOUNT THERMOSTATICALLY CONTROLLED ELECTRIC HEATER MEETING SECTION 49 OF UL–2021 FOR DAMP OR WET LOCATIONS, WITH GFI RECEPTACLE, U.L. 943 NEMA 3R MOUNTED 8" (MIN.) ABOVE SLAB.
    D. HEATER(S) SHALL BE PROVIDED AS NECESSARY TO MAINTAIN TEMPERATURE ABOVE 40° F AT ALL TIMES.
12. CUSTOMERS THAT REQUIRE UNINTERRUPTED SUPPLY OF POTABLE WATER MUST INSTALL REDUNDANT BACKFLOW PREVENTER ASSEMBLIES.
13. ENCLOSURE MUST BE A SUFFICIENT SIZE TO HOUSE ALL REQUIRED PIPING. ENCLOSURE SHALL BE LOCKABLE. ACCESS PANELS SHALL BE ABOVE THE CENTERLINE OF THE ASSEMBLIES, OR IN SIDE WALLS. ENCLOSURE TO HAVE HINGED ONE–WAY DRAIN FLAP SIZED FOR FULL PORT BACKFLOW DISCHARGE TO SURROUNDING GRADE. REFER TO DRAWING SD101.

LEGEND:

COMPONENTS SHADED IN GRAY TO BE FURNISHED BY WATER CO.

A– OS&Y GATE VALVE WITH FLANGED ENDS (FURNISHED & INSTALLED BY CUSTOMER)

B– DETECTOR CHECK VALVE W/ BYPASS METER (FURNISHED BY WATER CO., INSTALLED BY CUSTOMER)

C– DOMESTIC COMPOUND METER ASSEMBLY– METERS WITH FLANGED ENDS (FURNISHED BY WATER CO., INSTALLED BY CUSTOMER)

E– DISMANTLING JOINT TO HAVE FLANGED ENDS WITH JOINT RESTRAINT (FURNISHED & INSTALLED BY CUSTOMER)

G– BACKFLOW PREVENTER ASSEMBLY (FURNISHED & INSTALLED BY CUSTOMER)

H– PRESSURE REDUCING VALVE & OS&Y GATE VALVE (IF REQUIRED FURNISHED & INSTALLED BY CUSTOMER– SEE NOTE #7)

I– BYPASS SIZE SHALL BE NO GREATER THAN ONE STANDARD PIPE SIZE SMALLER THAN DOMESTIC SERVICE SIZE AND SHALL HAVE METAL STRAP FOR LOCKING OUT BYPASS VALVE (STRAP FURNISHED & INSTALLED BY WATER CO.)

NEW JERSEY AMERICAN WATER

REVISIONS		REVISIONS	
△		△	
△		△	
△		△	
△		△	
△		△	

NJ LICENSED PROFESSIONAL ENGINEER NO.

AMERICAN WATER ENGINEERING
3906 CHURCH RD.
MT. LAUREL, NJ 08054

AMERICAN WATER

DRAWN BY R. BEATTY
PROJECT ENG'R E. SCHWARTZ

DATE 08–24–18

PROJECT

STANDARD DETAIL
DOMESTIC & FIRE SERVICE METERS & BACKFLOW PREVENTERS IN HEATED ENCLOSURE

NEW JERSEY AMERICAN WATER | STANDARDS | USE DIMENSIONS ONLY SCALE AS SHOWN

USE APPROVED DRAWINGS ONLY FOR CONSTRUCTION PURPOSES

0201–0601–SD95

02010601SD92

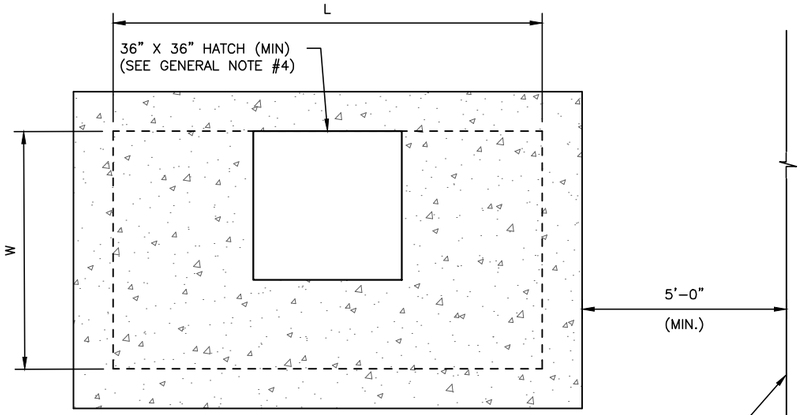

METER VAULT PLAN

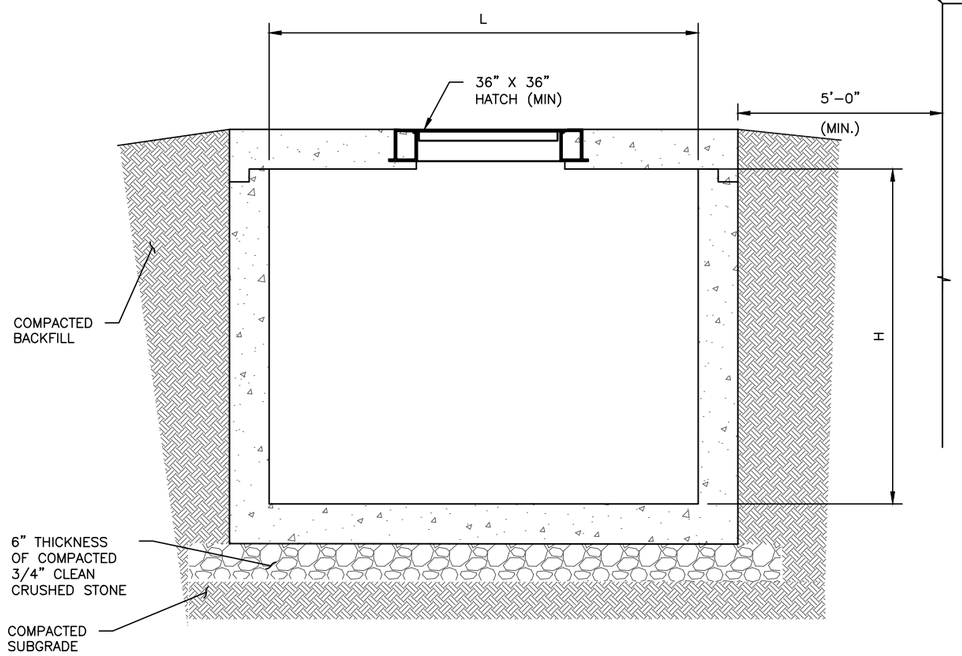

METER VAULT ELEVATION

STRUCTURE

	INTERIOR DIMENSIONS FOR FIRE & DOMESTIC METER VAULT (DWG SD89)						
	Without PRV Assembly			With PRV Assembly			
Service Size (in)	Length (ft)	Width (ft)	Height (ft)	Length (ft)	Width (ft)	Height (ft)	
3	10.00	8.00	6.50	11.00	8.00	6.50	
4	11.00	9.00	6.50	13.00	9.00	6.50	1
6	12.00	9.00	6.50	15.00	9.00	6.50	
8	13.00	10.00	6.50	16.00	10.00	6.50	
10	16.00	10.00	7.00	19.00	10.00	7.00	

	INTERIOR DIMENSIONS FOR DOMESTIC METER VAULT (DWG SD90)						
	Without PRV Assembly			With PRV Assembly			
Service Size (in)	Length (ft)	Width (ft)	Height (ft)	Length (ft)	Width (ft)	Height (ft)	
3	10.00	7.00	6.50	11.00	7.00	6.50	
4	11.00	7.00	6.50	13.00	7.00	6.50	1
6	12.00	8.00	6.50	15.00	8.00	6.50	
8	13.00	8.00	6.50	16.00	8.00	6.50	
10	16.00	8.00	7.00	19.00	8.00	7.00	

	INTERIOR DIMENSIONS FOR MULTI-USE METER VAULT (DWG SD92)						
	Without PRV Assembly			With PRV Assembly			
Service Size (in)	Length (ft)	Width (ft)	Height (ft)	Length (ft)	Width (ft)	Height (ft)	
4	12.00	7.00	6.50	14.00	7.00	6.50	
6	14.00	8.00	6.50	15.00	8.00	6.50	1
8	15.00	8.00	6.50	18.00	8.00	6.50	
10	18.00	8.00	7.00	21.00	8.00	7.00	

	INTERIOR DIMENSIONS FOR FIRE METER VAULT (DWG SD91)			
Service Size	Length (ft)	Width (ft)	Height (ft)	
3	7.00	7.00	6.50	
4	7.00	7.00	6.50	1
6	8.00	7.00	6.50	
8	9.00	7.00	6.50	
10	9.00	8.00	7.00	

CONCRETE STRUCTURE NOTES:

1. PRECAST CONCRETE METER VAULT SHALL BE DESIGNED FOR THE FOLLOWING CONDITIONS STATED BELOW (1.1 THROUGH 1.5). SUBMIT CALCULATIONS TO NEW JERSEY AMERICAN WATER FOR REVIEW. ALL CALCULATIONS SHALL BE SIGNED AND SEALED BY A PROFESSIONAL ENGINEER REGISTERED IN THE STATE WHERE THE CONSTRUCTION IS TO TAKE PLACE.
   - 1.1. STRUCTURE FILLED TO TOP WITH NO EXTERNAL SOIL PRESSURE.
   - 1.2. STRUCTURE EMPTY WITH SOIL BACKFILL TO FINISHED GRADE. ASSUME SOIL DRY DENSITY AT 95 LBS/C.F. ASSUME SOIL SATURATED TO FINISHED GRADE.
   - 1.3. STRUCTURE SHALL NOT FLOAT WITH SATURATED SOIL TO FINISHED GRADE. ASSUME SOIL LOAD ON CONCRETE LIP AT 32 LBS/C.F. A SAFETY FACTOR OF 1.5 SHALL BE PROVIDED IN THE FLOATATION CALCULATIONS.
   - 1.4. SOIL BEARING PRESSURE OF 2,500 PSF.
   - 1.5. EFFECTS OF ALL VERTICAL LOADS ANTICIPATED ON THE FINISHED STRUCTURE SHALL BE INCLUDED IN THE ANALYSIS AND DESIGN. LOADING FROM PIPING AND EQUIPMENT, HOIST, SUPERSTRUCTURES, SNOW, H-20 LIVE LOAD, AND ACTUAL DEPTH OF SOIL COVER SHALL BE INCLUDED.
2. THE EXTERIOR OF ALL PRECAST PRODUCTS SHALL BE COATED WITH TWO COATS OF BITUMASTIC PAINT, 16 TO 20 MIL DFT, TO FINISHED GRADE. USE PROMASTIC 900 COAL TAR WATERPROOFING MANUFACTURED BY PROGUARD COATING, INC., OR APPROVED EQUAL.
3. ALL ALUMINUM IN CONTACT WITH CONCRETE SHALL BE PAINTED WITH 2 COATS OF COAL TAR EPOXY OR ISOLATED FROM THE CONCRETE WITH 1/8" THICK NEOPRENE PADDING. ALL STEEL THRUST RESTRAINT ANGLES SHALL BE WIRE BRUSHED AND PAINTED WITH 2 COATS OF COAL TAR EPOXY.
4. ALL CONCRETE ANCHORS AND HARDWARE SHALL BE STAINLESS STEEL.
5. PROVIDE COMMON KEYED LOCKS FOR ALL HATCHES, PANELS, DOORS AND QUICK DISCONNECT CAPS ASSOCIATED WITH THIS PROJECT.
6. ALL STRUCTURES SHALL BE WATERTIGHT.
7. DUAL SEAL II GASKETS DISTRIBUTED BY DUAL SEAL CORP., OR APPROVED EQUAL, SHALL MEET ASTM C923 REQUIREMENTS.
8. JOINTS IN STRUCTURE SHALL BE SEALED WITH BITUMEN CONSEAL CS-102-B JOINT SEALANT MATERIAL MANUFACTURED BY CONCRETE SEALANTS, INC AND MEET FEDERAL SPECIFICATION SS-S-00210 (210-A).
9. CONCRETE STRUCTURES SHALL MEET THE REQUIREMENTS OF ASTM C478. DESIGN SHALL FOLLOW ACI 318-14 USING LOAD FACTOR DESIGN.
10. CONCRETE: fc = 4,000 PSI AT 28 DAYS. TYPE III CEMENT. AIR ENTRAINMENT 7% ± 2%. ASTM C33 NO. 57 OR NO. 67 COARSE AGGREGATE.
11. REINFORCEMENT: WELDED WIRE FABRIC SHALL CONFORM TO ASTM A185. BAR REINFORCEMENT SHALL BE GRADE 60, CONFORMING TO ASTM A615.
12. VERTICAL BAR REINFORCEMENT REQUIRED BETWEEN BASE SLAB AND FIRST VERTICAL SECTION OF STRUCTURE.

GENERAL NOTES

1. THE VAULT DIMENSIONS NOTED ABOVE ARE APPROXIMATE MINIMUM REQUIREMENTS BASED ON THE EQUIPMENT AND LAYOUTS SHOWN ON DRAWINGS SD89 THROUGH SD92.
2. THE DESIGN ENGINEER SHALL MAKE HIS OWN DETERMINATION TO ENSURE THAT THE REQUIRED CLEARANCES NOTED ON THE METER VAULT DRAWINGS ARE ACHIEVED BASED ON THE ACTUAL SERVICE SIZE(S), EQUIPMENT AND FITTINGS PROPOSED.
3. THE TABLES PROVIDED ABOVE ARE BASED ON THE LARGEST SERVICE SIZE ENTERING THE METER VAULT.
4. THE MINIMUM ACCEPTABLE ACCESS HATCH SIZE IS 36' X 36". FOR MULTI-USE SERVICE SIZES 8" AND LARGER, A SECOND 48" X 72" HATCH SHALL BE PROVIDED AND CENTERED ABOVE THE MULTI-USE METER ASSEMBLY. THE HATCH TYPE(S) & INSTALLATION LOCATION(S) SHALL BE AS SHOWN ON DRAWINGS SD89 THROUGH SD92, UNLESS OTHERWISE APPROVED BY NJAW.
5. ACCESS INTO THE VAULT SHALL BE VIA AN OSHA COMPLIANT ALUMINUM LADDER EQUIPPED WITH AN APPROVED LADDER UP DEVICE.
6. THE FLOOR OF THE VAULT SHALL BE SLOPED TOWARDS THE HATCH TO ALLOW FOR PUMP OUT SHOULD THE NEED ARISE. GROUT FILL SHALL BE PLACED ON TOP OF THE PRECAST BASE AND SLOPED AT ¼" PER FOOT TOWARDS THE HATCH OPENING. MINIMUM GROUT THICKNESS SHALL BE 2".

NEW JERSEY AMERICAN WATER

REVISIONS		REVISIONS	
1	REVISED DIMENSIONS R. BEATTY 11-29-22		

LICENSED PROFESSIONAL ENGINEER NO.

AMERICAN WATER ENGINEERING
3906 CHURCH RD.
MT. LAUREL, NJ 08054

AMERICAN WATER

DRAWN BY R. BEATTY
PROJECT ENG'R E. SCHWARTZ

DATE 08-24-18

PROJECT

STANDARD DETAIL

METER VAULT

NEW JERSEY AMERICAN WATER

USE APPROVED DRAWINGS ONLY FOR CONSTRUCTION PURPOSES

USE DIMENSIONS ONLY
SCALE NOT TO SCALE

0201-0601-SD99

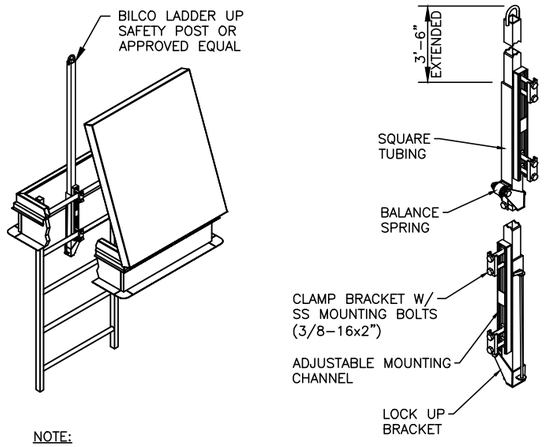

NOTE:

1. CLAMP BRACKET MAY BE REVERSED TO ACCOMMODATE RUNG SIZES OF 3/4" TO 1 1/4" WITH STANDARD 2" BOLTS FURNISHED. LARGER RUNGS WILL REQUIRE LONGER BOLTS.

LADDER UP SAFETY POST DETAIL 1 SD100

N.T.S.

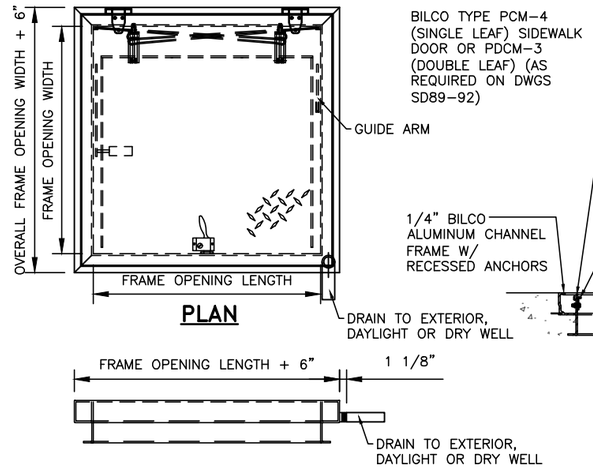

PLAN

ELEVATION

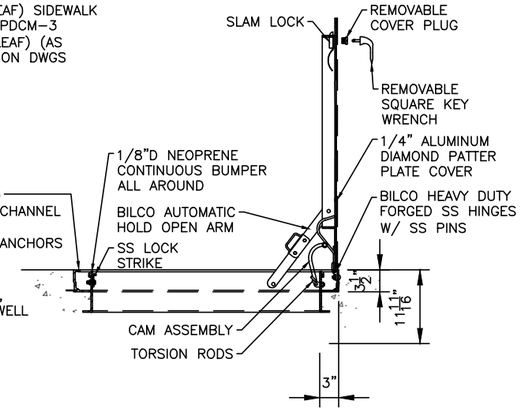

SECTION

ACCESS HATCH DETAIL 2 SD100

N.T.S.

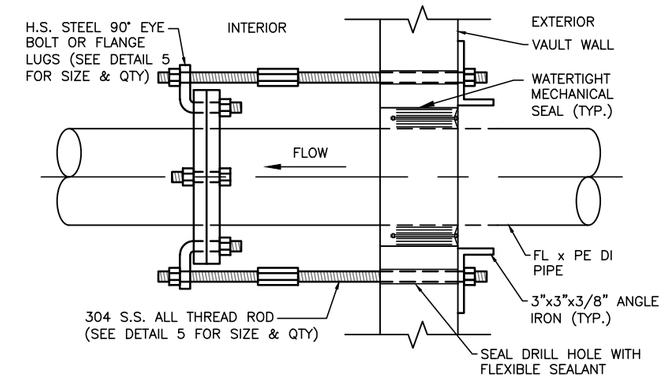

PLAN

VAULT PIPE RESTRAINT DETAIL 3 SD100

N.T.S.

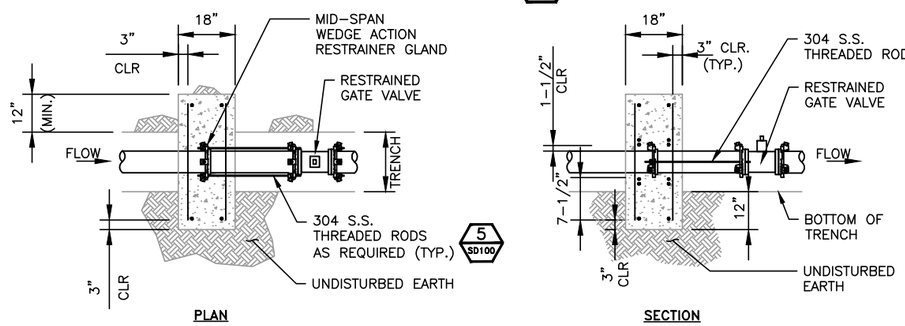

PLAN

SECTION

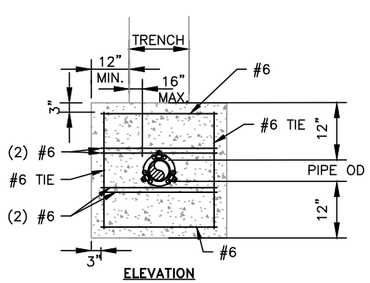

ELEVATION

NOTES:

1. PLACE THRUST COLLAR ON ONE FULL LENGTH OF PIPE.
2. LAST JOINT OF PIPE WITH THRUST COLLAR TO BE RESTRAINED MECHANICAL JOINT PIPE.
3. PLACE WEDGE ACTION RESTRAINER GLAND JOINT RESTRAINT 4 FEET FROM VAULT INLET SHUTOFF VALVE.
4. CONCRETE SHALL BE A MINIMUM OF 3000 PSI.
5. REINFORCING BARS SHALL BE DEFORMED BARS AND TIED TOGETHER.
6. BACKFILL & COMPACT IN 6" LAYERS.
7. TRENCH BOTTOM WIDTH IN AT THRUST COLAR LOCATION SHALL BE THE MINIMUM WIDTH PRACTICABLE FOR PIPE PLACEMENT. MAX. TRENCH WIDTH = PIPE O.D.+2 FT.

THRUST COLLAR DETAIL 4 SD100

N.T.S.

TIE ROD SIZING			
NOMINAL PIPE SIZE	# OF RODS	ROD SIZE	LUG THICKNESS
3	2	3/4	3/4
4	2	3/4	3/4
6	4	3/4	3/4
8	4	1	1
10	6	1	1
12	6	1 1/8	1 1/8

NOTE: MAX. PRESSURE 300 PSI

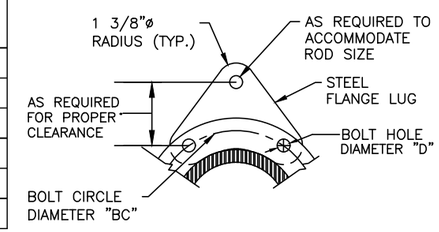

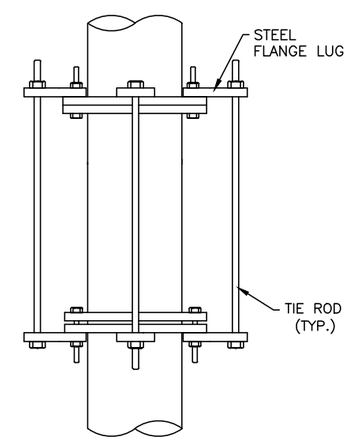

TIE ROD RESTRAINT DETAIL 5 SD100

N.T.S.

NEW JERSEY AMERICAN WATER

REVISIONS		REVISIONS	
△		△	
△		△	
△		△	
△		△	
△		△	

NJ LICENSED PROFESSIONAL ENGINEER NO.

AMERICAN WATER ENGINEERING
3906 CHURCH RD.
MT. LAUREL, NJ 08054

AMERICAN WATER

DRAWN BY R. BEATTY
PROJECT ENG'R E. SCHWARTZ

DATE 08-24-18

PROJECT

STANDARD DETAIL
METER VAULT APPURTENANCES

NEW JERSEY AMERICAN WATER

USE APPROVED DRAWINGS ONLY FOR CONSTRUCTION PURPOSES

USE DIMENSIONS ONLY
SCALE NOT TO SCALE

0201-0601-SD100

02010601SD100

	INTERIOR DIMENSIONS FOR FIRE & DOMESTIC BP ENCLOSURE (DWG SD93)		
Service Size (in)	Length (ft)	Width (ft)	Height (ft)
2	8.00	5.00	6.50
3	8.00	6.00	6.50
4	10.00	6.00	6.50
6	11.00	6.00	6.50
8	12.00	7.00	6.50
10	14.00	7.00	7.00

	INTERIOR DIMENSIONS FOR SINGLE SERVICE BP ENCLOSURES (DWG SD94)		
Service Size (in)	Length (ft)	Width (ft)	Height (ft)
2	8.00	3.00	6.50
3	8.00	3.00	6.50
4	10.00	3.00	6.50
6	11.00	3.00	6.50
8	12.00	4.00	6.50
10	14.00	4.00	7.00

	INTERIOR DIMENSIONS FOR FIRE & DOMESTIC METER & BP ENCLOSURE (DWG SD95)					
	Without PRV Assembly			With PRV Assembly		
Service Size (in)	Length (ft)	Width (ft)	Height (ft)	Length (ft)	Width (ft)	Height (ft)
2	12.00	5.00	6.50	13.00	5.00	6.50
3	13.00	6.00	6.50	15.00	6.00	6.50
4	15.00	6.00	6.50	17.00	6.00	6.50
6	18.00	7.00	6.50	20.00	7.00	6.50
8	20.00	8.00	6.50	23.00	8.00	6.50
10	24.00	8.00	7.00	27.00	8.00	7.00

	INTERIOR DIMENSIONS FOR DOMESTIC METER & BP ENCLOSURE (DWG SD96)					
	Without PRV Assembly			With PRV Assembly		
Service Size (in)	Length (ft)	Width (ft)	Height (ft)	Length (ft)	Width (ft)	Height (ft)
2	12.00	4.00	6.50	13.00	4.00	6.50
3	13.00	4.00	6.50	15.00	4.00	6.50
4	15.00	4.00	6.50	17.00	4.00	6.50
6	18.00	5.00	6.50	20.00	5.00	6.50
8	20.00	5.00	6.50	23.00	5.00	6.50
10	24.00	6.00	7.00	27.00	6.00	7.00

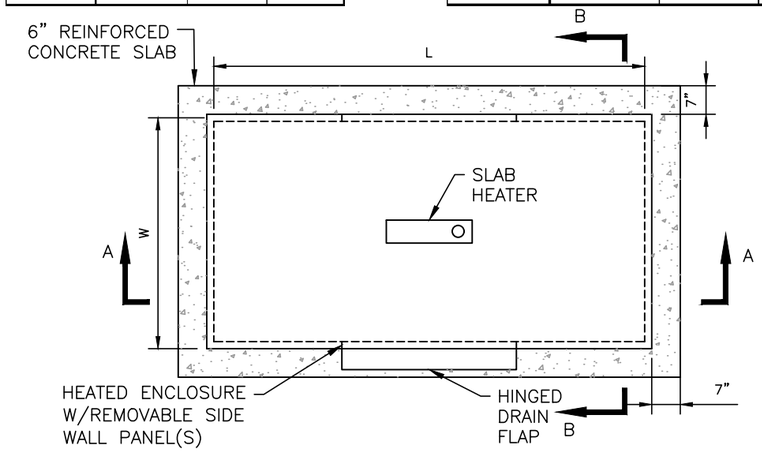

ENCLOSURE PLAN

N.T.S.

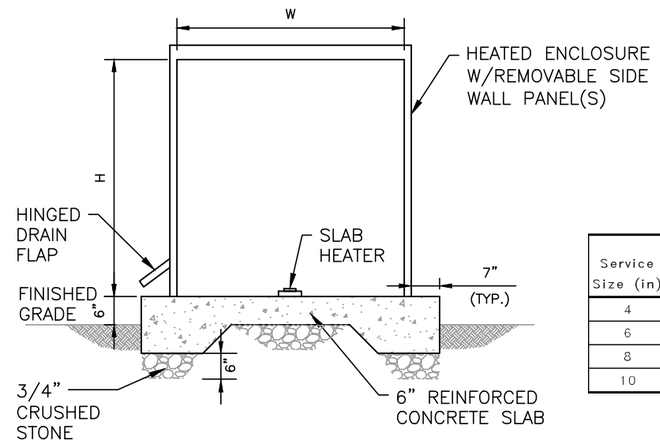

SECTION B–B

N.T.S.

	INTERIOR DIMENSIONS FOR MULTI–USE METER & BP ENCLOSURE (DWG SD98)					
	Without PRV Assembly			With PRV Assembly		
Service Size (in)	Length (ft)	Width (ft)	Height (ft)	Length (ft)	Width (ft)	Height (ft)
4	16.00	4.00	6.50	18.00	4.00	6.50
6	19.00	5.00	6.50	22.00	5.00	6.50
8	22.00	5.00	6.50	25.00	5.00	6.50
10	26.00	6.00	7.00	29.00	6.00	7.00

	INTERIOR DIMENSIONS FOR FIRE METER & BP ENCLOSURE (DWG SD97)		
Service Size	Length (ft)	Width (ft)	Height (ft)
2	10.00	3.00	6.50
3	10.00	4.00	6.50
4	12.00	4.00	6.50
6	14.00	4.00	6.50
8	15.00	5.00	6.50
10	18.00	6.00	7.00

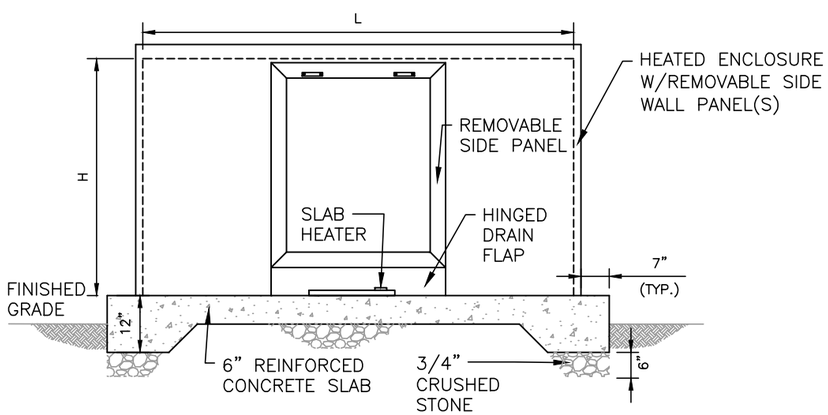

SECTION A–A

N.T.S.

CONCRETE SLAB NOTES:

1. CONCRETE SLAB SHALL BE DESIGNED BASED ON SOIL BEARING PRESSURE OF 2,500 PSF.
2. EFFECTS OF ALL VERTICAL LOADS ANTICIPATED ON THE FINISHED STRUCTURE & SLAB SHALL BE INCLUDED IN THE ANALYSIS AND DESIGN. LOADING FROM PIPING AND EQUIPMENT, SUPERSTRUCTURES, WIND AND SNOW SHALL BE INCLUDED AS APPROPRIATE.
3. ALL ALUMINUM IN CONTACT WITH CONCRETE SHALL BE PAINTED WITH 2 COATS OF COAL TAR EPOXY OR ISOLATED FROM THE CONCRETE WITH 1/8" THICK NEOPRENE PADDING. ALL STEEL THRUST RESTRAINT ANGLES SHALL BE WIRE BRUSHED AND PAINTED WITH 2 COATS OF COAL TAR EPOXY.
4. ALL CONCRETE ANCHORS AND HARDWARE SHALL BE STAINLESS STEEL.
5. PROVIDE COMMON KEYED LOCKS FOR ALL HATCHES, ND QUICK DISCONNECT CAPS ASSOCIATED WITH THIS PROJECT.
6. DESIGN SHALL FOLLOW ACI 318–14 USING LOAD FACTOR DESIGN.
7. CONCRETE: fc = 4,000 PSI AT 28 DAYS. TYPE III CEMENT. AIR ENTRAINMENT 7% ± 2%. ASTM C33 NO. 57 OR NO. 67 COARSE AGGREGATE.
8. REINFORCEMENT: WELDED WIRE FABRIC SHALL CONFORM TO ASTM A185. BAR REINFORCEMENT SHALL BE GRADE 60, CONFORMING TO ASTM A615..

GENERAL NOTES:

1. THE ENCLOSURE DIMENSIONS NOTED ABOVE ARE APPROXIMATE MINIMUM REQUIREMENTS BASED ON THE EQUIPMENT AND LAYOUTS SHOWN ON DRAWINGS SD93 THROUGH SD98.
2. THE DESIGN ENGINEER SHALL MAKE HIS OWN DETERMINATION TO ENSURE THAT THE REQUIRED CLEARANCES NOTED ON THE ENCLOSURE DRAWINGS ARE ACHIEVED BASED ON THE ACTUAL SERVICE SIZE(S), EQUIPMENT AND FITTINGS PROPOSED.
3. THE TABLES PROVIDED ABOVE ARE BASED ON THE LARGEST SERVICE SIZE ENTERING THE ENCLOSURE.
4. ENCLOSURE MUST MEET OSHA 29 CRF 1910.145 AND ASSE 1060 CLASS 1.
5. INSULATED HEATED ENCLOSURE CHARACTERISTICS.
   A. ENCLOSURE–5052–H32 MARINE GRADE ALUMINUM (0.050/18 GAUGE), MILL FINISH, OR 1/8" POLYESTER RESIN REINFORCED WITH FIBERGLASS STRAND
   B. INSULATION– 1–1/2" (R9) POLYISOCYANURATE FOAM
   C. HEATING SYSTEM– SLAB OR WALL MOUNT THERMOSTATICALLY CONTROLLED ELECTRIC HEATER MEETING SECTION 49 OF UL–2021 FOR DAMP OR WET LOCATIONS, WITH GFI RECEPTACLE, U.L. 943 NEMA 3R MOUNTED 8" (MIN.) ABOVE SLAB.
   D. HEATER(S) SHALL BE PROVIDED AS NECESSARY TO MAINTAIN TEMPERATURE ABOVE 40° F AT ALL TIMES.
6. ENCLOSURE MUST BE A SUFFICIENT SIZE TO HOUSE ALL REQUIRED PIPING. ENCLOSURE SHALL BE LOCKABLE. ACCESS PANELS SHALL BE ABOVE THE CENTERLINE OF THE ASSEMBLY, OR IN SIDE WALLS IN SUFFICIENT NUMBER AND LOCATION TO FACILITATE MAINTENANCE & REPAIRS ON ALL COMPONENTS. ENCLOSURE TO HAVE HINGED ONE–WAY DRAIN FLAP.
7. ENCLOSURE DIMENSIONS ARE MEASURED TO THE INSIDE WALLS.

NEW JERSEY AMERICAN WATER

REVISIONS		REVISIONS	
△		△	
△		△	
△		△	
△		△	
△		△	

NJ LICENSED PROFESSIONAL ENGINEER NO.

AMERICAN WATER ENGINEERING
3906 CHURCH RD.
MT. LAUREL, NJ 08054

AMERICAN WATER

DRAWN BY D. JOBE
PROJECT ENG'R E. SCHWARTZ

DATE 08–24–18

PROJECT

STANDARD DETAIL

HEATED ENCLOSURE

NEW JERSEY AMERICAN WATER | STANDARDS | USE DIMENSIONS ONLY SCALE AS SHOWN

USE APPROVED DRAWINGS ONLY FOR CONSTRUCTION PURPOSES

0201–0601–SD101

02010601SD101

FITTINGS & EQUIPMENT LAYING LENGTHS

	Laying Length (inches)				
Nominal Service Size	**3"**	**4"**	**6"**	**8"**	**10"**
A- Gate Valve (OS&Y)	8	9	10.5	11.5	13
B- Detector Check Valve (DCV)	15	15	21	25	28.75
C- Domestic Compund Meter Assembly (includes spool, strainer, meter & test p	24	29.5	39.375	42	55
D- Multi-Use Meter Assembly (includes strainer, meter & test port)	------	43	57.25	63.3125	70
E- Dismantling Joint	9	9	9	9	10
F- Sw ing Check Valve	9.5	11.5	14	19.5	24.5
G- RPZ Backflow Preventer Assembly (inludes gate valves)	42.25	55.125	65.5	78.5	93.625
G- Double Check Backflow Preventer Assembly (inludes gate valves)	40.375	52.375	62.875	75	90
H- Pressure Reducing Valve (PRV) (excludes shutoffs)	12	15	20	25.375	29.75
Y-Strainer DI Class 125	10.125	12.125	18.5	21.625	26
Tee (Run)	11	13	16	18	22
Tee (Branch)	5.5	6.5	8	9	11
90º Bend	5.5	6.5	8	9	11
Spool (FLGxFLG) (minimum length available)	------	4.25	4.5	5	5.5

1

NOTES:

1. **LAYING LENGTHS SHOWN ABOVE ARE APPROXIMATE** AND BASED ON SPECIFIC MANUFACUTRER AND MODEL COMPONENTS. DESIGN ENGINEER TO VERIFY ALL DIMENSIONS, BASED ON ACTUAL EQUIPMENT AND FITTINGS PROPOSED.
2. LAYING LENGTHS NOTED ABOVE DO NOT INCLUDE GASKET THICKNESS.
3. THE USE OF FLANGED COUPLING ADAPTERS IS STRICTLY PROHIBITED.

NEW JERSEY AMERICAN WATER

REVISIONS		REVISIONS	
1	REVISED LAYING LENGTHS R. BEATTY 11-29-22		

NJ LICENSED PROFESSIONAL ENGINEER NO.

AMERICAN WATER ENGINEERING
3906 CHURCH RD.
MT. LAUREL, NJ 08054

AMERICAN WATER

DRAWN BY D. JOBE
PROJECT ENG'R E. SCHWARTZ

DATE 08-24-18

PROJECT

STANDARD DETAIL
DOMESTIC & FIRE SERVICE
TYPICAL LAYING LENGTHS OF EQUIPMENT & FITTINGS

NEW JERSEY AMERICAN WATER | STANDARDS | USE DIMENSIONS ONLY SCALE AS SHOWN

USE APPROVED DRAWINGS ONLY FOR CONSTRUCTION PURPOSES | 0201-0601-SD102

02010601SD102